Forest View Acres Water District (FVAWD)
Capital Improvement Plan

February 23, 2012 – Draft

Table of Contents

I. GENERAL 1
- **1. Introduction** 1
- **2. District Overview** 1

II. ASSETS – FACILITIES 2
- **3. Summary/Scope** 2
- **4. Sources** 3
  - **4.1 Arapaho Well** 5
  - **4.2 Limbaugh Canyon Surface Water Intake** 5
  - **4.3 Dawson Well – Not in Use** 6
  - **4.4 Other Ground Water Resources – Not in Use** 6
- **5. Treatment** 7
  - **5.1 Ground Water Treatment Plant (Arapaho Treatment Plant)** 7
  - **5.2 Surface Water Treatment Plant** 8
- **6. Delivery** 9
  - **6.1 Ground Water Delivery** 10
  - **6.2 Surface Water Delivery** 10
  - **6.3 Interconnects** 10
- **7. Storage and Distribution** 11
  - **7.1 Tank** 11
  - **7.2 Distribution System** 11

III. ASSETS – OTHER 13
- **8. Land and Buildings** 13
- **9. Easements** 13
- **10. Water Rights** 13
- **11. District Maps** 14
- **12. Administrative Systems** 14

IV. PROJECTS (IMPROVEMENTS TO ASSETS) 14
- **13. Capital Improvements Defined** 14
- **14. Project Discussion** 15
  - **14.1 Analysis and Planning** 15
  - **14.2 Sources** 16
  - **14.3 Treatment** 18
  - **14.4 Delivery** 19
  - **14.5 Storage and Distribution** 20
  - **14.6 Controls** 22
  - **14.7 Land and Buildings** 23
  - **14.8 Easements** 23
  - **14.9 Water Rights** 23
  - **14.10 District Maps** 23
  - **14.11 Administrative Systems** 24
  - **14.12 Operational Improvements** 25
- **15. Project Evaluation** 26
- **16. Capital Project List** 26

APPENDICES 29
- **A. Acronyms** 29
- **B. References** 30
- **C. History of Capital Improvements** 32

List of Figures

Figure 1. FVAWD Service Area 2
Figure 2. Locations of Major Facilities 3
Figure 3. Denver Basin 4
Figure 4. Monument Creek Watershed 4
Figure 5. Arapahoe Aquifer 5
Figure 6. Dawson Aquifer 6
Figure 7. Arapaho Treatment Plant – Conceptual Overview 8
Figure 8. Surface Water Treatment Plant – Conceptual Overview 9
Figure 9. SCADA Conceptual System Schematic 22

List of Tables

Table 1. Distribution System – Summary by Neighborhood 12
Table 2. District Owned Land & Buildings 13
Table 3. Project Evaluation Considerations 26
Table 4. Capital Project Summary 27
Table 5. Summary of Major Improvements and Capital Investment (History) 32

Forest View Acres Water District (FVAWD)
Capital Improvement Plan

I. GENERAL

1. Introduction

This document is meant to establish a multi-year plan for capital improvements for Forest View Acres Water District (FVAWD). It provides baseline information on the current status of capital assets and identifies candidate projects to improve capital assets. Where necessary, it identifies issues and areas needing research that may need resolution before a capital project is initiated. If available, budget estimates are included for each proposed project.

This document is maintained by the district's Board of Directors, management company and operators. It is intended for use in coordination with the annual budget process so that projected revenues can be aligned with achievable projects. This document is also a management tool to be used as a reference document and to provide a high-level view of the district's assets, operational capabilities and potential improvements.

Some of the content of this capital improvement plan (CIP) references locations and facilities within the district. While this document includes some high level drawings and maps, the document is not meant to replace more detailed information contained in district maps or operations manuals.

2. District Overview

Under Colorado law Title 32-1, FVAWD is a local government known as a Special District. Colorado law limits the types of services that county governments can provide to residents. Special Districts are created to fill gaps that may exist between the services counties provide and the services the residents may desire (i.e., drinking water, fire protection, wastewater treatment, etc.). The majority of districts draw their boundaries in unincorporated areas of a county, and the residents may be included in more than one special district with each district providing a different service. FVAWD was formed to provide potable water (drinking water) to its service area and, therefore, is known as a Special Water District. FVAWD does not provide wastewater treatment. The majority of customers within the district have private septic systems, although a small number (25 residents in "The Villas") also have wastewater treatment provided by Palmer Lake Sanitation District. As a Special District and a political subdivision of the State of Colorado, FVAWD is required to submit a number of required filings to various state agencies throughout the year; including financials, election results, water test results, and others.

FVAWD is located in the northwest corner of unincorporated El Paso County, Colorado. The district serves customers in three non-contiguous areas of land. Within the district, there are approximately 350 residential lots, 288 of which have houses built on them. The district does not serve any commercial customers. The district has been built over time, with additions to the service area being made in conjunction with the construction of new homes and inclusion of new subdivisions. The subdivisions served by the district are Cloven Hoof, Red Rock Ranch, Red Rocks Reserve, Shiloh Pines, Sundance, and The Villas. See Figure 1 for a map of the service area showing the location of each of these subdivisions.

FVAWD's service area is also located between the base of Mount Herman and Colorado State Route 105. As such, it has significant changes in elevation with the "top" or highest point of the district's service area being at an elevation of 7618' and the "bottom" or lowest point being at 6,968'. With one foot of elevation causing 0.4333 psi change in pressure, these elevation changes and corresponding pressure variations are major factors impacting how the district is operated. Well water being moved uphill needs a

pump house (booster station) in order to reach the top of the district, and water flowing downhill through the distribution system needs to have pressure reduced via pressure reduction valves (PRVs).

Figure 1. FVAWD Service Area

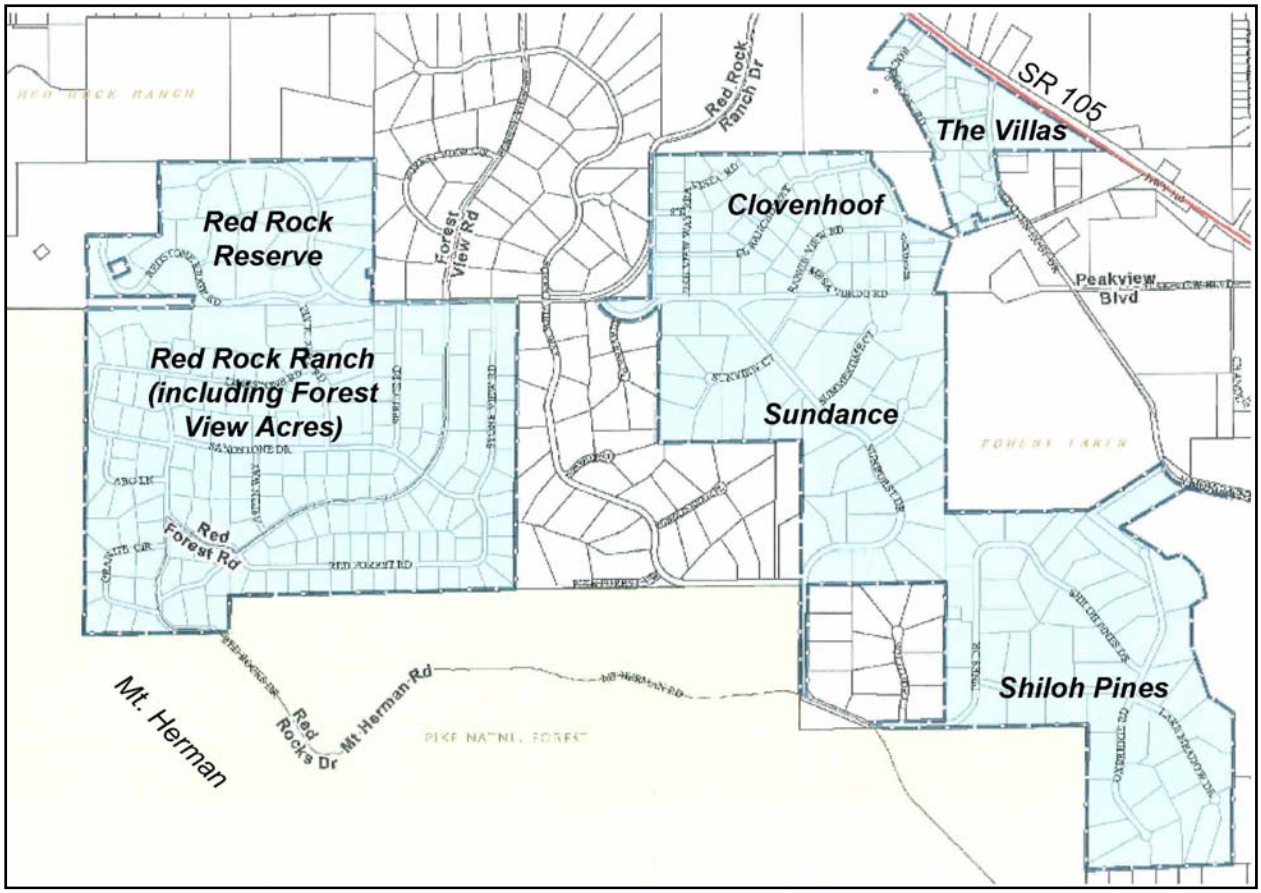

II. ASSETS – FACILITIES

3. Summary/Scope

FVAWD owns physical assets (or facilities) that provide the capabilities to obtain water, treat it and provide it to customers. In this document, the district's facilities are divided into the following categories:

- Sources – the facilities (wells and surface water intakes) that capture and direct raw water to a treatment plant.
- Treatment – water treatment plants (i.e., the Arapaho Treatment Plant and the Surface Water Treatment Plant).
- Delivery – the facilities that move (deliver) a) untreated water to the treatment plants or b) treated water to storage (the tank) and/or the distribution system as well as interconnects between FVAWD and adjacent water systems.

- Storage and Distribution – the storage of treated water plus the distribution system used to provide water to individual homes and customers.

Figure 2 shows the locations of major FVAWD source water, treatment and transmission facilities. Details on the locations of pipes within the transmission and distribution system can be found within the district's maps.

Figure 2. Locations of Major Facilities

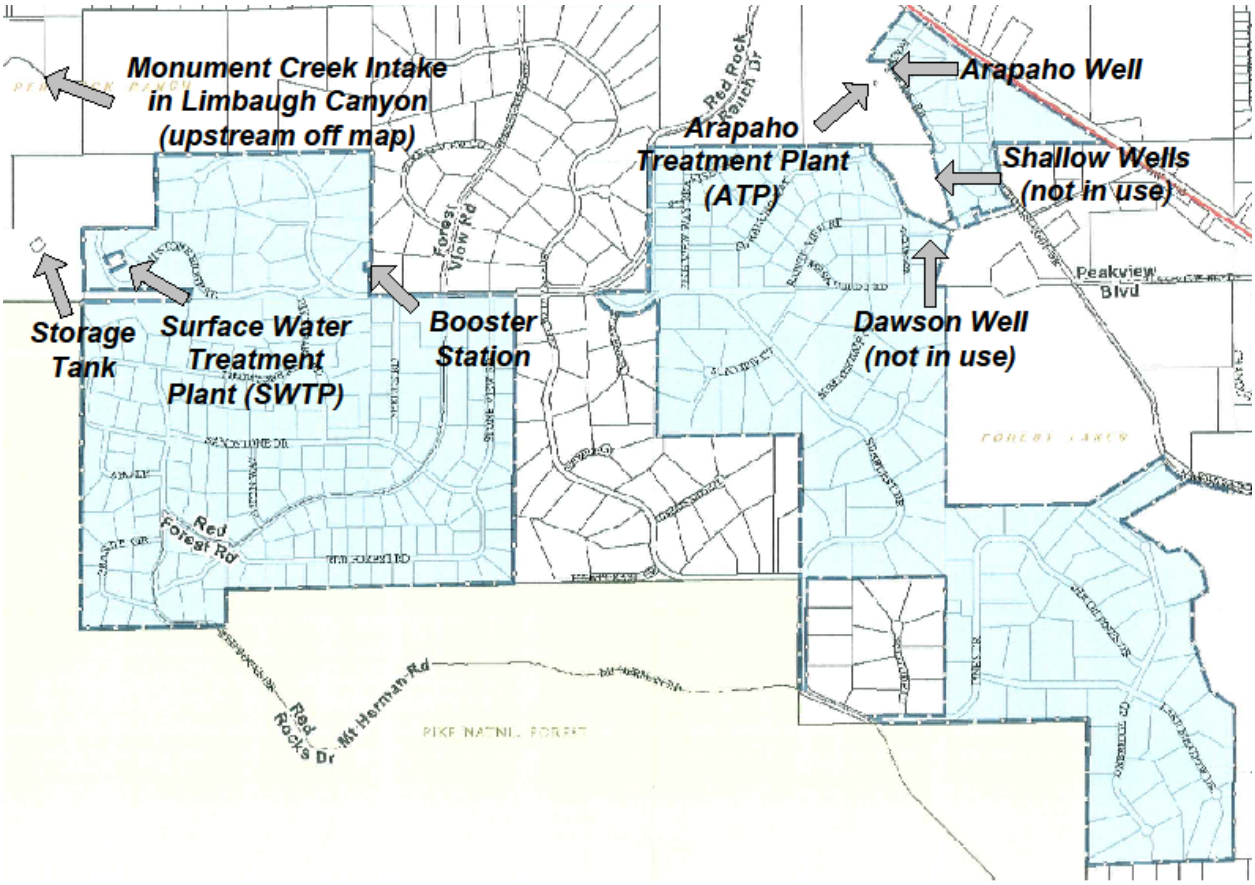

4. Sources

The district owns water rights to the Denver Basin aquifers (i.e., ground water) as well as water from Monument Creek (i.e., surface water). All water provided to FVAWD's customers is from one or both of these resources. FVAWD currently obtains water from two sources: a well that obtains water from the Arapaho aquifer in the Denver Basin and a surface water intake that pulls water from Monument Creek in Limbaugh Canyon. An additional well drilled into the Dawson aquifer, a lower quality water source, is inactive. The district also owns two additional shallow wells that are not in use. Section 10 on page 13 summarizes the District's water rights.

Denver Basin. The Denver Basin is structural, sedimentary rock basin underlying a 6,700 square mile area that includes Denver and Colorado Springs. It is an important nonrenewable source of ground water for much of the Front Range. FVAWD is located near the southwestern edge of the Denver Basin. As illustrated in Figure 3, the Denver Basin is comprised of layered geologic formations. Within this, four aquifers are statutory defined: Dawson, Denver, Arapahoe, and Laramie-Fox Hills. FVAWD has water rights to the Dawson (the highest) and Arapahoe (the second lowest) aquifers. Wells in these aquifers

are governed by CRS (Colorado Revised Statutes) 37-90-137, CRS 37-92-602, and the Denver Basin Rules.

Figure 3. Denver Basin

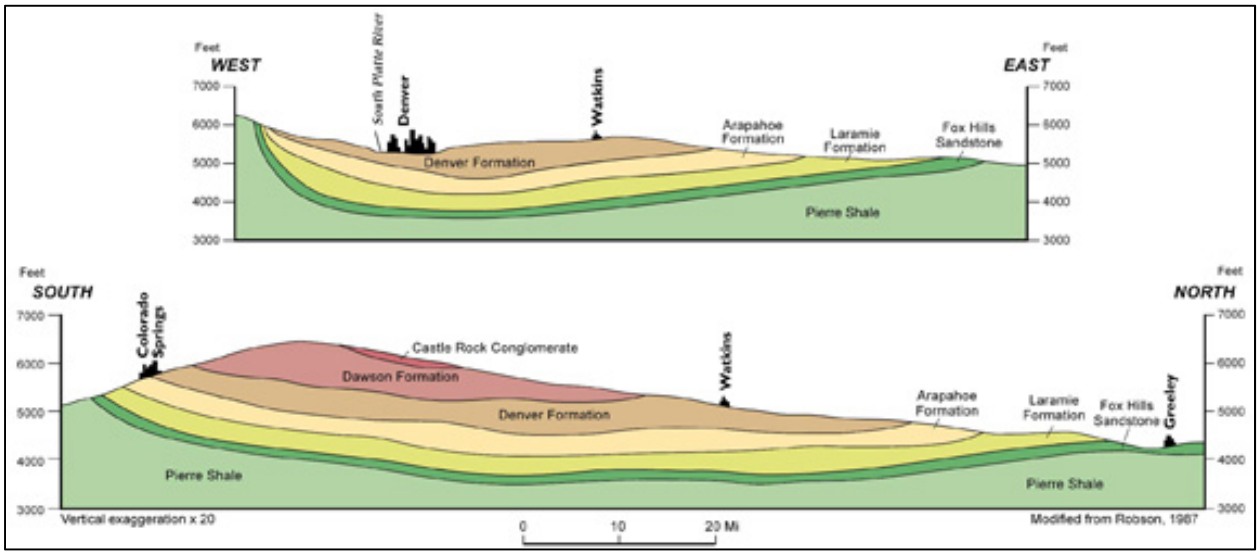

North Monument Creek Watershed. The Monument Creek Watershed is located in northwestern El Paso County and encompasses approximately 151,300 acres. The Monument Creek Watershed is part of the Fountain Creek Watershed and of the larger Arkansas River drainage. In simple terms, a watershed is the area of land uphill from a point in a stream that forms a collection basin (almost like a funnel) where all the water on that land drains off to the same place. As can be seen in Figure 4, the Air Force Academy is roughly in the center of the Monument Creek Watershed. Numerous faults run through the Monument Creek watershed.

Figure 4. Monument Creek Watershed

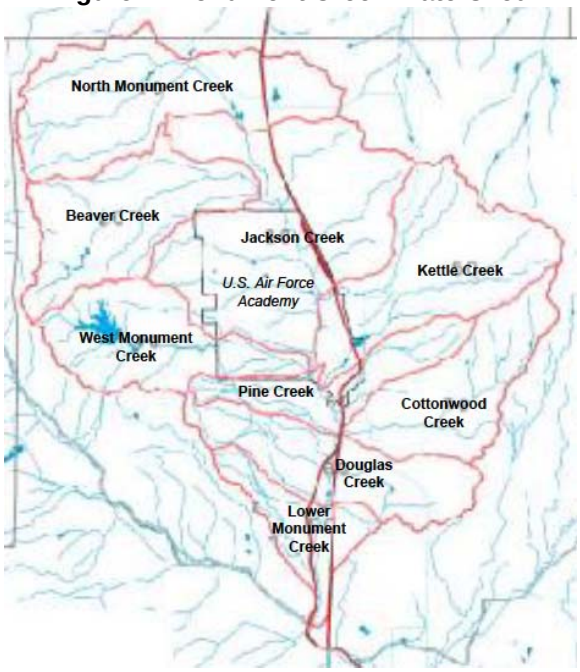

FVAWD's surface water intake is located in Limbaugh Canyon and takes water from North Monument Creek, a sub-watershed of the Monument Creek Watershed. The area is subject to unpredictable weather patterns, and often receives over 25" of precipitation per year. Precipitation generally occurs during the summer months as part of seasonal cycles and during the winter in the form of snow. Unpredictable weather patterns can occur within the watershed, and it is prone to seasonal flooding. The upstream, mountainous and forested areas to the west are under federal management as part of the Pike National Forest.

4.1 Arapaho Well

The Arapaho Well is the district's most important ground water resource, and reliably produces water year-round. The Arapaho Well is so named because it pulls water from the Arapahoe Aquifer within the Denver Basin. Figure 5 shows the underground location of the Arapahoe Aquifer.

Figure 5. Arapahoe Aquifer

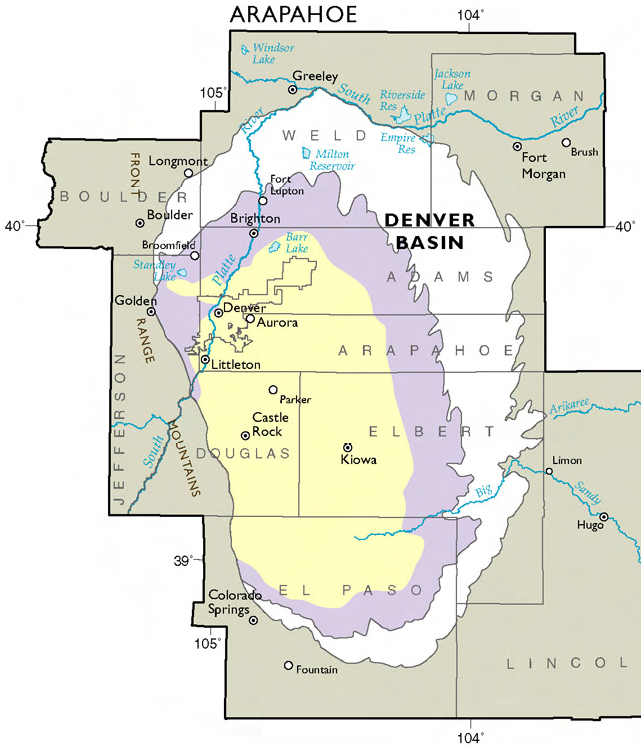

In 1991, this well was constructed under permit # 39865-F, completed to a depth of 1764 feet and at a cost of $443,363. Originally, it provided 80 GPM on a production rate. The water from this well is of a high quality, although it contains iron and manganese that are fairly simple to remove during treatment.

The pump within the well is controlled by a variable frequency drive (VFD). The VFD allows for smoother start-up and shut-down of the pump, provides the ability to throttle down production from the well, (thus, reducing strain on the pump and aquifer) and also provides a more consistent way to match actual production out of the well to the healthy production capability of the well. This pumping approach has a lower peak demand than the district's older approach of pumping at 100% capacity until enough water was produced and then shutting the pump off. The shorter and less intensive run times lessen the cone of depression, thereby allowing the aquifer to recover more quickly and decreasing electrical costs that would be incurred from pulling water from a greater depth.

Recurring maintenance on the well is needed roughly every seven years. This maintenance typically requires the well to be off-line for three to four weeks and involves pulling the pump out of the well, inspecting the casing, making any repairs necessary and installing a new pump. There is research indicating that the whole Denver Basin water resource continues to decline with no recharge. This depletion of the aquifer is a long-term consideration, and local aquifer levels need regular monitoring. During the next maintenance cycle, the district expects to lower the depth of the pump to ensure this resource is available for many years to come.

4.2 Limbaugh Canyon Surface Water Intake

The Upper Intake is located in Limbaugh Canyon at 7,664.8' and is located in Forest Service Land. FVAWD does not have an easement for the intake or this section of line from the intake. FVAWD also is not recorded on the Nevins easement in Limbaugh Canyon although the pipes run through the same ditch. The Lower Intake is no longer operational it was destroyed in a flood – year of flood uncertain. The Lower Intake was shared with the other users. From the intake, water is piped downhill (gravity-fed) to the surface water treatment plant. The pipe material, condition of the pipe and exact location are unknown for much of the delivery piping from the intake to the Surface Water Treatment Plant (SWTP), although some of the pipe is exposed in areas near the intake and a large portion of the pip it is believed to run down the west side of the access road that runs from the intake area to the SWTP.

4.3 Dawson Well – Not in Use

The Dawson Well (also known as Nevins Well #1) is located at SW1/4 SE1/4, Sec. 9 Twp.11 S, Range 67 W. The Dawson Well is named for the Dawson aquifer (shown in Figure 6), from which it can produce water. The well was originally drilled under well permit #16327-F. It produced reliably for several years and then, due to declining productivity, was abandoned. In 2005, it was relocated under permit #40213-F & #40213-FR in 2005 and completed to a depth of 690' at a cost of $149,940. It tested at a production rate of 45 GPM. The replacement well was partially outfitted, but never brought into production in part because the district was producing an adequate supply of water from its other sources.

Figure 6. Dawson Aquifer

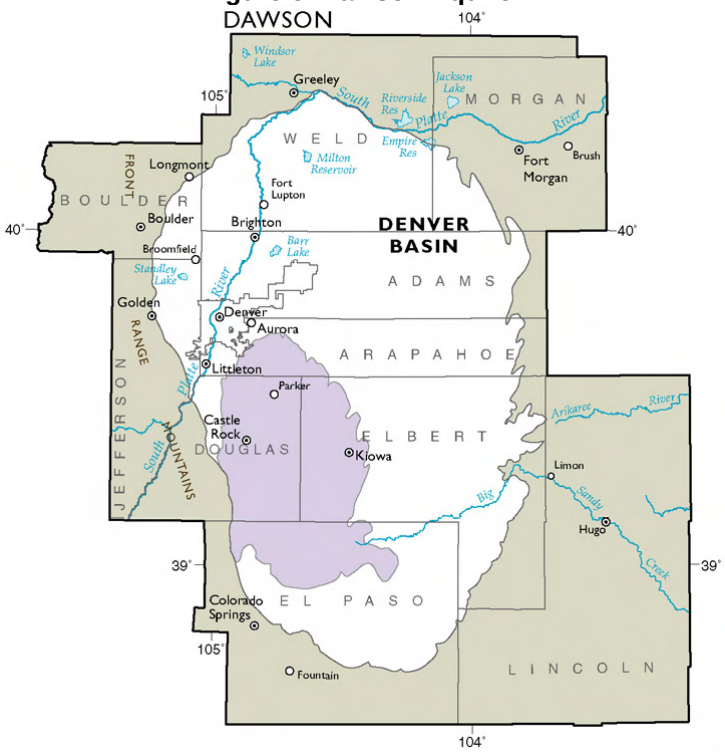

Should the district decide to bring this well into production, a new permit would be required. Additional engineering work would be needed on the well. Water treatment capacity would also be needed; this could be achieved by building a new facility for the Dawson well or by piping untreated water to an upgraded Arapaho Treatment Plant.

4.4 Other Ground Water Resources – Not in Use

Other ground water resources owned by the district and classified as "Tributary" resources, (meaning they are part of the surface water scheme), include two other wells along Monument creek. These are called Nevins Well #'s 2 and 4. Currently, these wells are both inactive. If needed, they have potential for being used as alluvial wells (i.e., wells that draw water closer from the surface and from the sedimentary bed surrounding Monument Creek). This would require research into their suitability for this purpose, development of an augmentation plan, potential filing for additional water rights, engineering work, redevelopment of the wells and development of transmission and treatment capacity. Augmentation simply means that since ~80% (number needs verification) of all water used in the district returns to the alluvium, the district can draw as much water as it wants from alluvial wells as long as it replaces the used up 20% from its non-tributary sources or wells.

Nevins Well # 2 is located at SE 1/4 SE 1/4, Sec. 9 Twp. 11.0S, Range 67.0W. Its first beneficial use is recorded in 1906, originally completed to a depth of 90 ft. from records dating to 1878. At that time it provided a production rate of 58 GPM. It was grand-fathered or formally recognized with well permit #20930-F in 1976. Interestingly, when FVAWD took possession in 1987, using the Amendment of Existing Record-Change of Ownership, the Range somehow changed to 69W. In a signature of acceptance for filing by the State Engineer, dated 9/27/1990, the difference from the decreed Range and the stated Range was recognized. It was noted that as a condition for acceptance the Range of 69W had to be changed back to the original decreed Range of 67W.

Nevins Well # 4, located at SE 1/4 SE 1/4, Sec. 9 Twp. 11.0S, Range 67.0W, 6PM (and close to Well #2), has a bit of interesting history. It was drilled under well permit # 5723-F in 1964 and completed to a depth

of 33 ft. Originally, it provided a production rate of 50gpm. Due to a flood in 1965, there was note on the well log that the well was deepened but no official records indicate by how much. Then, in early 1984, Nevins made application to replace the well since the galvanized pipe casing had rotted through. Inspection was made to verify the claimed well condition. As a condition for the issuance of the new well permit #5723-FR, the original well was to be plugged and abandoned, the new well must be located 50 feet west of the abandoned well, well production rate could not exceed and annual rate of 43 acre/feet or 65 GPM and limited to the alluvium of Monument Creek tributary water. In August of 1984, the new well was drilled to 103 feet, yielded 15 GPM and had a 7½ HP pump installed. In February of 1985, an affidavit was filed stating that the original well was plugged. Then, in the summer of 1985 an anonymous complaint was filed with the state that Nevins was selling water at 150 GPM to the town of Monument using this well. The complaint was filed because the well was pulling water from a pond close by. In March of 1994, FVAWD took possession of this well.

> *Note: We're aware of a line that the Nevins were constructing in conjunction with the Town of Monument. Supposedly, this line goes from the Nevins property on Cloven Hoof and to the Monument treatment plant and was built with the intent of supplying the Town of Monument with water. The Nevins have repeatedly offered to turn this line over to the district with the idea that the district could make money by selling water to the Town. We don't really know all the history on this, or if there are outstanding legal issues.*

5. Treatment

The district owns two treatment plants, one that processes ground water and a second that processes surface water. These two plants are the Arapaho Treatment Plant (ATP), which is used for ground water processing, and the Surface Water Treatment Plant (SWTP). The district has some automation and controls within each treatment plant. These controls are not integrated and a significant portion of plant operations is done manually.

Of the two plants, the ATP is considered the more reliable – both because well water has been a more reliable source than surface water and because there have operational problems with the SWTP. The district has continued to work in making both of these plants reliable.

5.1 Ground Water Treatment Plant (Arapaho Treatment Plant)

Built circa 1995, the Arapaho Treatment Plant (ATP) is housed within a metal building located on Rockbrook Road near the bottom of the district and at an elevation of 6,987'. The building is 20x40' and is divided into an office section where maps and records are kept and an operating plant section. The initial plant was designed and built by Pure Water Solutions. Improvements to automation were made in December 2010 with the installation of a Programmable Logic Controller (PLC) that is used to control most operational sequences within the ATP.

The raw well water enters in from the well on the NW corner of the building. The plant is controlled automatically via tank level controls in the main storage tank and remote transmittal to the ATP Program Logic Controller (PLC). The raw water has aesthetically objectionable amounts of iron and manganese, so it is pre-treated with sodium hypochlorite (chlorine) and potassium permanganate solutions (injected via a metering pump) and then processed through three manganese greensand pressure filters, entering the top of the filters and coming out of the bottom. After that, a VFD-controlled booster pump is used to move the treated water up the hill through a 4" transmission line and to the booster station (which then pumps the treated water further uphill).

Plant backwash is initiated automatically. Backwash sequences performed by the pneumatic control system are initiated by a pressure differential across the filters. Backwash is done to filters in sequence (not all three being backwashed simultaneously) by pushing raw water from the well backwards through

the filters, and is done to remove iron and manganese build-up from the filters. The iron sludge backwash is piped from the plant and is treated by Palmer Lake Sanitation.

The plant has safety and fail-over features. The plant was originally designed with a series of timers, later removed and controlled via the PLC, that will shut down the plant if failure occurs somewhere in the sequence of operations. If pressures exceed the plants design, a pressure relief valve blows off high pressure. Key readings and alarms are tied into an alarm panel and an auto-dialer that calls the district operators in case of a problem.

Figure 7 shows a simplified drawing of the ATP. This drawing is conceptual only and omits important details of the plant's control points, various valve locations (i.e., for check valves, pressure relief valves, or control valves), pressure meters, compressor, mixers, recorders, etc.

Figure 7. Arapaho Treatment Plant – Conceptual Overview

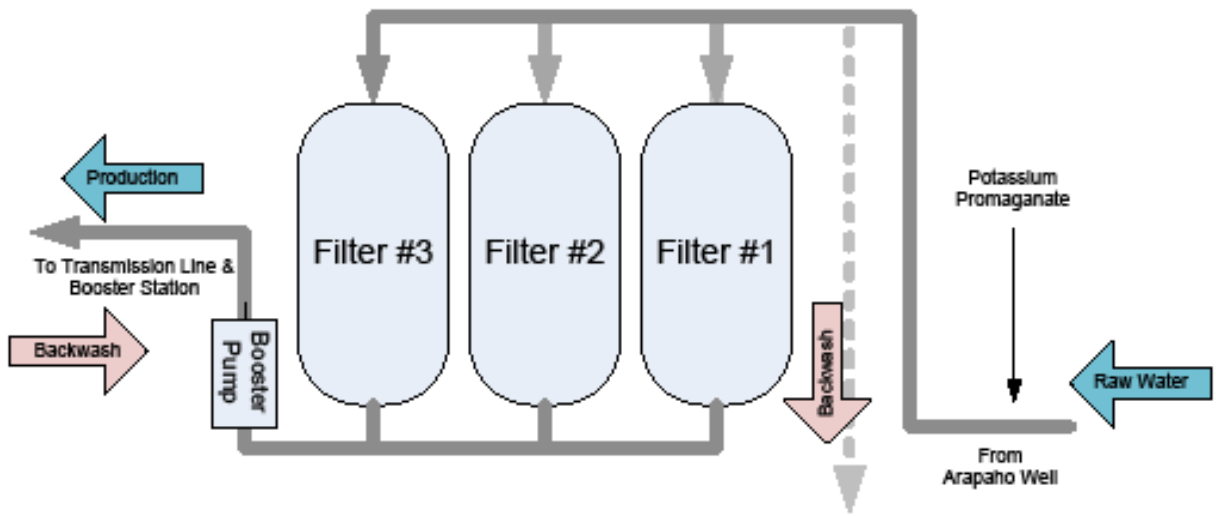

5.2 Surface Water Treatment Plant

The Surface Water Treatment Plant (SWTP) is located on Redstone Ridge Road near the top of the district at an elevation of 7,430'. Operation of this plant is a priority because of the high quality of the surface water and the lower costs of operating this plant (in comparison to the ATP). However, this plant cannot be operated 365 days a year with current equipment. During some points of the year, there may be insufficient water in Monument Creek to supply the plant. At other times (e.g., spring runoff), the water has a higher turbidity (particulate) level that the plant is currently capable of processing in compliance with state regulation.

Raw water is collected from Monument Creek at an elevation substantially higher than the SWTP, and is carried (gravity fed) via a raw water transmission line to the SWTP.A solenoid valve opens to allow a constant throttled flow of raw water through the delivery pipe to prevent freezing in the winter.

Raw water enters the SWTP at the northwestern corner of the plant. Plant start-up is initiated manually. The surface water is high-quality with little pollution or foreign substance, although it sometimes has a higher particulate content (turbidity) than the plant can readily process. After water enters the SWTP, its turbidity is measured, chemical filter aid is injected to aid in coagulation and removal of impurities, and CL2 (chlorine) is injected to disinfect the raw water. Water passes through three primary filters (garnet), and then through two secondary or polishing filters (finer grade garnet). Turbidity is measured again as the processed water exits each of the secondary filters. Control systems are a mix of pneumatic and electronic controls. Once treatment is completed, water exits the plant into a line that carries it to the

distribution system and the storage tank. Currently, all water flow through the SWTP is driven by head pressure from the intake. The plant has had pumps capable of moving water up to the storage tank; however, these have been disconnected and are not currently in use.

Plant backwash is also initiated manually, with backwash sequences managed by the control system and based on timing. Water flow for backwash is driven by head pressure from the storage tank. Backwash of primary and secondary trains are controlled separately. Sequencing of backwash allows one filter to be backwashed at a time, with backwash water being sent to a retention pond. The return line from this pond is not currently in use. The plant has been subject to pressure spikes, surges and hammer effect; these occur primarily during the backwash cycle and have been somewhat controlled by manual operation techniques during the backwash cycle.

The plant has automatic shut-offs. There is a Chlorine residual analyzer that will shut the plant down if chlorine levels become too low. High turbidity measured on the exit side of each of the secondary filters will cause production water to be sent to waste (the retention pond) for 10 to 15 minutes; then turbidity will be remeasured and, if it has not been brought into line with acceptable parameters, the plant will be shut down.

Figure 8 shows a simplified drawing of the SWTP. As with the drawing for the ATP, this drawing is conceptual only and omits important details of the plant's operational components.

Figure 8. Surface Water Treatment Plant – Conceptual Overview

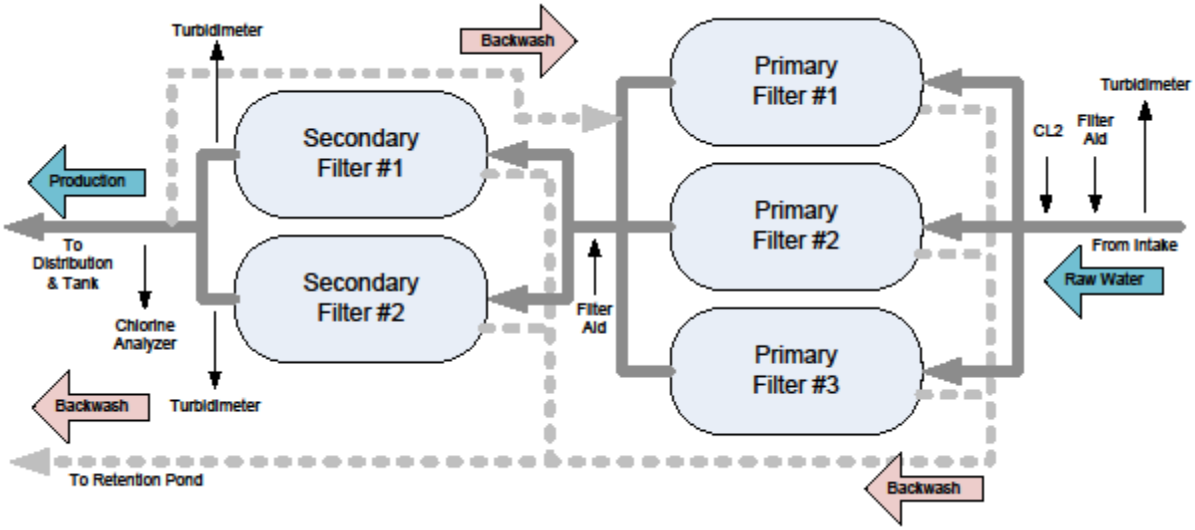

6. Delivery

Once treated, water must be moved to storage and distribution. The time water spends in transition from treatment plants to the storage tank or to the distribution system is also considered as part of calculations used in the treatment process. Most notably, this includes dispersion of chemicals used during treatment (e.g., potassium) adequate contact time for chlorine to inactivate any potential bacteria.

Water is delivered into the distribution system at three points: on Pixie Park Road, by the SWTP near the cul-de-sac on Redstone Ridge Road, and into upper Limestone Road (primarily fed from the storage tank). More details of these connections can be found on system maps.

6.1 Ground Water Delivery

A transmission line is used to carry treated water from the Arapahoe Well and to the distribution system (via a Booster Pump Station). There is also a section of transmission line that has been installed, but is not yet in use.

Transmission Line – ATP to Distribution System. The transmission line allows water to be pumped from the Arapahoe well and treatment plant (ATP) at 6,987' to the booster station at 7,217'. This 230' head represents approximately 104 psi. The PVC pipe is rated at 200 psi. There are no interconnects between the transmission line and the distribution system in this line.

Booster Pump Station. The booster station provides additional pumping capacity to pump water into the distribution system as well as to the storage tank. The elevation gain is from 7,217' to approximately 7,640', a head of just 383'. This is equivalent to 172 psi. The booster station contains two pumps: a 20 Hp pump that is used in primary operations and a 7.5 Hp pump which was initially installed to pump from the now inactive Dawson Well and can now be used for back-up. The 20 Hp pump produces approximately 250 psi pumping pressure. During normal start-up, the booster station pump turns on with a three minute delay after the ATP begins pumping water up the transmission line. When the pump comes on, a valve on the uphill side of the pump opens slowly in response to increased pressure. Water from the booster station is pumped through another segment of transmission line and into the distribution system on Pixie Park Road. The booster pumps drop out of service in response to low pressure from the ATP (e.g., during ATP backwash). A check valve in front of the pumps prevents water from draining back down the transmission line to the ATP.

In connection with the 2010/2011 maintenance and relining of the water tank, a recirculating system was installed in the booster station. This recirculating system (when manually configured) allows the pumps to run continuously in the event the pumps were needed to maintain constant pressure in the distribution system without delivering water to a storage tank. Safety features include a blow-off to the back of the building to release excess water pressure.

Red Rock Reserve Transmission Line – Not in Use. As part of the inclusion of the Red Rock Reserve Subdivision, a significant portion of transmission line was built for future use and ownership was transferred to FVAWD.

6.2 Surface Water Delivery

From the Surface Water Treatment Plant (SWTP), the effluent line from the plant connects to a chlorine contact loop where water is held for a minimum of 35 minutes and then transmitted to the distribution system and/or to be stored in the tank. This loop is located under the road by the SWTP. It is a large 12" diameter pipe that runs north on the road for approximately 300', does a U-turn, is increased to a 16" and runs 350 feet back to the south where it connects to the piping to the tank and distribution system. The contact loop was designed for a build out of 350 homes. After treated water leaves the contact loop it either moves into the distribution system or into the tank for storage.

6.3 Interconnects

Monument and Palmer Lake are the two water districts that share boundaries with FVAWD. Interconnections between districts provide the ability for water districts to cross-supply one another, and especially to support one-another in case of water outage or fire emergency. FVAWD currently has a method of creating a temporary interconnection with Palmer Lake that can be implemented in emergency situations. This involves using a FVAWD-owned fire hose to create a connection between a Palmer Lake fire hydrant and the FVAWD Booster Station. There is no interconnection with Monument, although piping exists (not owned by FVAWD) that, in theory, may be used for future agreements.

7. Storage and Distribution

Treated water is delivered to customers through a network of pipes known as the distribution system. Water not immediately needed for use is stored in a single water tank. Treated water is fed into the distribution system, either on Red Rocks Ranch Road (for ground water) or into a line between the tank and the upper end of Limestone Road (for surface water).

7.1 Tank

The 250,000 gallon water tank is located at an elevation 7,640', and stored water is gravity-fed to the district as needed. The tank is a floating tank, with water filling and emptying through the same line. The tank only fills when flow from one or both of the treatment plants into the distribution system exceeds demand. The tank has high water shutoff sensors (26 feet high) and a low level alarm. Currently, the tank can hold a four-day supply of water for the 284 customer taps, or approximately 50K gal/day. The tank was built in approximately 1975 and has an expected total service life of 50 years.

7.2 Distribution System

Because the district is located at the base of a mountain and has elevation changes, water is fed through the distribution system using gravity, starting at the higher elevations in the district and flowing to the lower elevations (refer to current district maps for specific locations of these pipes). At selected points within the district, pressure reducing valves (PRVs) are used keep water pressure from exceeding the design limits of the distribution system. These PRVs require periodic maintenance to ensure that they remain in good working order; well working PRVs result in reduced strain on the distribution system and thereby a reduced number of distribution system leaks.

In late 2010, flow meters were added into the distribution system. The district has an extremely high leak rate, as measured by a percentage of water produced (i.e., treated) vs. water used by customers (i.e., billed). The flow meters divide the district into zones so that leak rates can be independently calculated for each zone. As this data builds, the district expects to have increasing accurate data for use in isolating major leaks. See district maps for the locations of locations of flow meters and resulting zones.

In 2006, an engineering company (ASCG) worked with the operator (Dan LaFontaine) to create a priority analysis of the distribution systems to determine the most critical needs for replacement. This analysis was based on historic knowledge of the system. The information in this document used the 2006 data as a baseline, and has been updated as more information became available and changes occurred. Much of the system is aging and needs replacement. A large portion of the distribution system has varying sized, non-standard materials or requires frequent repairs.

Of the six neighborhoods served by FVAWD, the quality of the each neighborhood's distribution system is ranked from best to worst in the following order: Red Rocks Reserve, Shiloh Pines, Sundance, Red Rock Ranch, Cloven Hoof, and The Villas. Red Rock Ranch includes the Forest View Acres subdivision and is shown on the ASCG report as Forest View Acres, East and West. Locations of these neighborhoods within the district are shown in Figure 1 on page 2, and detailed information about them below in Table 1.

Red Rocks Reserve has 8' PVC and it's estimated that the piping will last at least 50 years; the PRVs have a life of at least 5 years. Red Rock Ranch is directly south of Red Rocks Reserve and is a mixture of 6" PVC, 4" PVC and 6" Cast Iron (CI) piping. There are just a few areas with 4" pipe, but the PVC and CI are intermixed. The district boundary ends with these two subdivisions and the transmission line continues East on Red Rocks Ranch Drive and is met at Sundance Drive, which leads to Cloven Hoof (north) and Sundance to the south. Sundance is made up of 8" and 6" PVC piping. To the north the piping is 6" PVC into Cloven Hoof and 6"PVC to the South into Shiloh Pines. Shiloh Pines is also made up of all 6" PVC piping. Cloven Hoof is made up of 2"PVC with sections of 1.5" and 1" thin wall irrigation

piping. The water main running from here to the Villas is 1"PVC.The Villas is a mixture of 1-1.5" thin wall poly irrigation tubing. There is an abandoned line that ran from The Villas to Shiloh Pines.

Note: Gabby proposed omitting most of the above material and referring to the maps for line location, size and material. Let's discuss this after the current map set is updated.

To keep cost down, there needs to be a scheduled maintenance of the PRVs and fire hydrants. The locations of these are as follows: Red Rocks Reserve has three PRVs and ten fire hydrants, it might be assumed that these will not need any updates in the next five years and that there are a sufficient number of fire hydrants. Red Rock Ranch/Forest View Acres has three PRVs and 15 fire hydrants, but there is insufficient data as to when these valves were put in service and when they have been maintained. On the border of Cloven Hoof and The Villas there are two PRVs and three fire hydrants according the 6/08 document from RG Consulting suggesting that increasing the number of hydrants in these divisions may be warranted. There is one PRV bordering Sundance and Shiloh Pines and at least 15 hydrants for these two areas.

Table 1. Distribution System – Summary by Neighborhood

Date	Neighborhood	Cost	Distribution System Characteristics
As of 5/11/2006	The Villas	2006 Value: $315,000 Historic Cost: $115,605)	The Villas has a pipe quantity of 7200 LF, multiple leaks, poly pipes, 2" or smaller causing inadequate fire flow, numerous leaks in known and unknown places, some preventative maintenance. System strength not looped dead ends and small pipe size. Pipes are primarily Polyethylene, some Transite, valves, fire hydrants and pressure reducers, and one C-900 PVC.
As of 5/11/2006*	Cloven Hoof	2006 Value: $283,000 Historic Cost: $129,331)	Cloven Hoof has a pipe quantity of 6475 LF Glued joint PVC pipe and has numerous leaks, long dead end lines in the cul-de-sacs. Area also contains Transite, valves, fire hydrants and pressure reducers and one C-900 PVC. Primarily has 6" pipe, with some 2" and 3". Some leaks not found and has had preventive maintenance. **Note: in Nov 2011, a new water main was added on Vista View Rd.*
As of 5/11/2006	Red Rock Ranch (including Forest View Acres)	2006 Value: $1,093,000	Red Rock Ranch has a pipe quantity of 24975 LF. There are several different pipe sizes and pipe material that prevent adequate fire flow. 4" and 6" Cast Iron; 2", 4" and 6" PVC. Area varies with known leaks not found and preventive maintenance.
As of 5/11/2006	Shiloh Pines	2006 Value: $489,000 Historic Cost: $223,473)	Shiloh Pines has a pipe quantity of 11,175 LF. Pipe is adequately sized for fire flow and in decent condition, neighborhood system should have more than one feed and the 1- 4" PVC line should be increased to 6" PVC, which is prevalent in remainder of subdivision. Some known and unknown leaks and there has been preventive maintenance.
As of 5/11/2006	Sundance	2006 Value: $232,000 Historic Cost: $178,230)	Sundance has a pipe quantity of 5,295 LF. Pipe is adequately sized for fire flow and in decent condition; neighborhood system should have more than one feed, 8 and 6" PVC. There are some known and unknown leaks and has had preventive maintenance.

Date	Neighborhood	Cost	Distribution System Characteristics
2007/2008	Red Rock Reserve		This is a new subdivision that recently came on line. 8" PVC piping. Plan replacement in 2057 or 2058.

III. ASSETS – OTHER

8. Land and Buildings

The district owns the parcels of land shown in the following table. Legal descriptions and additional information can be found on the website for El Paso County Assessor's Office.

Table 2. District Owned Land & Buildings

Assessor's Schedule #	Location	Market Value*		Square Feet	Use
		Land	Building		
7116403002	Shiloh Pines Dr.	$44,000		25,500	Not in use. Former tank site
7109007006	Vista View Dr.	$16,078		1,200	Old Dawson pump building and access
7109000088	Rockbrook Rd.	$723		900	Arapaho well site
7109000087	Rockbrook Rd.	$1,000	$35,239	900	Arapaho/ground water plant building. Note that building is not built squarely on district property.
7109000045	Rockbrook Rd.	$7,207		8,500	Not in use. Former tank site.
7100000353	Above Redstone Ridge Rd.	$12,586		10,443	Tank site.
7100000293	Redstone Ridge Rd.	$23,625		19,602	Surface treatment plant site.
7100000277	Red Rock Ranch Rd.	$15,900	$1,356	6,000	Booster Pump site.

*All market values are for 2010 and are as estimated by the Assessor's office.

9. Easements

El Paso County allows a "standard" utility easement along all roads. The district has a series of easements that have been obtained over the years; these may not be fully documented. Additional easements are under negotiation. There is still a requirement to inventory and review the easements.

10. Water Rights

In Colorado, the ability to access water is based on three things: the availability of water, the facilities to collect water (e.g., wells), and the legal right to that water. Water rights establish ownership of the right to use water and are subject to a body of law meant to govern allocation and distribution of water as a scarce resource and to establish priority use in cases when there is an inadequate supply of water to meet all desired needs (e.g., during drought).

The district has substantial water rights. These are summarized in the draft 2008 Water Supply Study, as well as in a letter created by the District's water lawyer to support the 2006 audit. The ground water rights decreed in:

Case #01CW026 for ~140 acre/feet/year and
Case #99CW161 for ~1070 acre/feet/year and
Case #'s W-3220 & 3220-74 for 240 acre/feet/year from the Dawson aquifer and

> Case #W-773 for no more than 39 acre/feet/year at 58 GPM from the tributary and
> Case #W774 for 42 acre/feet/year at 65 GPM from the tributary…

give the district access to the listed amounts of water per year, which sum to 1531 acre/feet. In the first two cases, specific amounts of water can be taken from the four respective aquifer resources, (The Dawson, Denver, Arapahoe and Laramie-Fox Hills). In the other three cases, water can only be taken from just one resource. Each well cannot, in total with all other wells the district owns, withdraw more than the total amount of acre-feet allocated in the adjudicated water rights.

The district also has surface water rights that allow it to take water from Monument Creek.

11. District Maps

Accurate maps of the water district are an essential operations and management tool. Furthermore, the district is required to submit district boundary maps to the Colorado Department of Local Affairs (DOLA) and the El Paso County Assessor's office, on an annual basis. Previous map sets were created in 1974, 1985 and 1992. Historically, new map sets were created in response to changes in the water district (e.g., inclusions of additional properties into the district) and to incorporate additional or changed information.

In 2008, FVAWD completed an initiative to create a new map set. Advancements in technology had made the creation of map sets in electronic format both practical and cost-effective. The district adopted the strategy of converting baseline data from the 1992 map set into a standard CAD format, and of building the map set in electronic layers that allowed for the ready addition of further information as it became available as well as for the easy incorporation of any needed changes or corrections. The baseline layer is an aerial photograph of the district; presentation of data has been creating by overlaying this photograph. In contrast, the district boundary map was based on legal description (although it also includes an aerial photograph that has been adjusted to align with the legal descriptions). Both sets of maps were created in AutoCAD format.

12. Administrative Systems

FVAWD currently has a website (www.fvawd.com). Billing, accounting and customer management systems are provided via contract with the district's management company. District records are stored in the Arapaho Treatment Plant or in the offices of the district's management company, operations company, lawyers, and/or engineers.

IV. PROJECTS (IMPROVEMENTS TO ASSETS)

13. Capital Improvements Defined

Capital assets are tangible assets having long lives that are used in the production or sale of other assets or services. In accounting, capital assets are also known as "plant assets" or "plant and equipment." Examples of capital assets include equipment, buildings, and land (but not land held for future use). Except for land, capital assets wear out and depreciate over time. FVAWD's capital assets include the wells, water plants, transmission system, tank, and distribution system.

***Capital Assets and Capital Expenses*.** A capital expenditure is an expenditure that increases net assets. The district uses the all of the following definitions and criteria to determine if expenditures qualify as capital expenditures or not:

- The initial cost of acquiring a capital asset includes all normal, necessary, and reasonable costs needed to get the asset in place and ready to produce (e.g., insurance needed in order to put the

asset in place is counted in the cost of the asset; however, insurance needed after the asset is in place is not). The initial cost of acquiring a capital asset is treated as a capital expense. When an existing capital asset is fully replaced, the expense of creating the new asset is a capital expense.

- Ordinary repairs and replacements are expenditures made to maintain an asset in its normal operating condition and good state of repair. Maintenance costs (e.g., cleaning, lubricating, or adjusting) are often treated as ordinary repairs and replacement from an accounting perspective.

- Extraordinary repairs and replacements are major repairs made, not to keep an asset in its normal good state of repair, but to extend its useful life beyond the number of years originally estimated. Expenditures for extraordinary repairs are treated as capital expenditures.

- A betterment may be defined as replacement of an existing asset (or portion of an asset) with an improved or superior asset. Examples include replacing manual controls on a machine with automatic controls; removing an old motor and replacing it with a larger, more powerful one; replacing a wood shingle roof with a tile roof. Usually, a betterment results in a better, more efficient or more productive asset, but not necessarily one having a longer life. Expenditures for betterments are treated as capital expenditures.

***Service Life and Depreciation*.** One key goal of capital planning is to estimate the remaining life of existing capital assets, and then to use that information in estimating when the asset will need replacement and in track the value of the asset in the district's financial records. Service life is the period of time a capital asset is used in the production and sale of other assets or services (i.e., water). A capital asset's service life is predicted at time of purchase or installation. A productive life longer than a single accounting period (i.e., longer than one year) distinguishes a capital asset from an item of supplies.

Depreciation is used to allocate the cost of a capital asset to the time periods over that benefit from its use. From an accounting perspective, depreciation is nothing more than the expiration of a capital asset's quality of usefulness. Depreciation only begins after the asset is put into use. Because depreciation is a cost allocation process, balance sheets do not show market value of the assets. The balance sheet assumes that the district is a going concern and will be in operation long enough to recover the costs of capital assets through the delivery and sale of water. When an asset's accumulated depreciation becomes equal to its cost, the asset is said to be fully depreciated.

Sooner or later a capital asset wears out, becomes obsolete, or becomes inadequate. When this occurs, the asset is discarded, sold or traded in on a new asset. Entries will be made to the books showing the disposal of the asset, and the asset's costs and accumulated depreciation will be removed from the books.

14. Project Discussion

This section contains discussion of improvements and work needed, including issues, research to be done, philosophies, trade-offs, etc. Inclusion of a project in this section does not represent a commitment to implement that project.

14.1 Analysis and Planning

In cases where significant district resources are involved or unknown technology is being explored, independent analysis and planning work is required prior to beginning work on individual projects. This helps ensure that capital funds will be spent efficiently and minimizes potential wasted work or rework. This is particularly important for efforts that are capital-intensive, with labor, material, and/or equipment costs being high. The following projects have been identified:

- ***Master Plan – Storage and Distribution System.*** Replacement of the distribution system, or major portions of it, is the single most expensive project in which the district will engage. A master plan is needed that will establish target pipe sizes for primary and branch mains, identify mains that should be rerouted (e.g., to move them out of back yards and into public easements next to roads), evaluate water storage requirements and potential upgrades to storage capacity (via increased pipe size or additional tank storage), establish desired flow rates (to prevent water stagnation), identify possible fail-over capabilities that would reduce the impacts of any outage (e.g., loops, parallel lines, or emergency tie-ins), establish water storage requirements for peak demand and fire suppression, determine any need for additional fire hydrants (both for fire fighting and for flushing the distribution system), additional flowmeters, etc. This plan should also identify construction or design standards that might need to be established. In general, the district should defer to national, state or county standards; however, addition standards may be needed to address unique characteristics of the district (i.e., weather, altitude or elevation change) or district preferences (e.g., a requirement for tracer wire on all newly installed pipe). The master plan should identify FVAWD-specific construction standards in sufficient detail to allow them to be incorporated into the district's Rules and Regulations or similar document.

- ***Water Supply Study Close-Out.*** In 2008, RG Consulting Engineers completed a draft report that contained recommendations regarding the development of water sources currently available to the district and the use and disposition of the district's water rights. Recommendations focused to maximizing the use of multiple water sources to supply the district and considered the option of selling excess water rights to raise funds for capital improvements. This report remains in draft status until the district directs the engineers to complete it. Completion of the Water Supply Study requires the district to identify the scope of the study and specification or verification of the assumptions that drive the conclusions. An example assumption needing verification is the potential growth in demand, particularly as driven by inclusion. Direction regarding scope should include alternatives that should be considered (e.g., an alternative that optimizes capital and operating costs in addition to the exiting option that focuses on multiple water sources). The study could also be expanded to include projected water availability. Once the district defines desired scope, engineers can be directed to complete this study. Alternatively, the board could write a memo identifying any relevant issues or assumptions that future board members might need to be aware of and discontinue any future work on this study.

- ***Micro Hydro.*** The fact that there are significant differences in elevation within the district boundaries means high energy costs are incurred moving water from sources at a low elevation and to storage or service areas at a high elevation. It also means that water flowing downhill provides opportunity to capture energy and convert it to electricity, either for use in operations or to sell back to electrical utilities. As micro-hydro technology advances are made, it would be wise for the district to consider capital improvements that could pay for themselves in short order. The secondary beneficial effect that micro-hydro introduces into a system is a drop in pressure. So, not only is energy recovered from water moving from a higher elevation to a lower, but the negative impacts of high pressure on the system are mitigated. The specifics of this project are yet to be defined. This is also an industry where technology is continuing to advance.

The district has not identified potential projects that would implement other alternative energy sources such as solar or wind power. However, there may be opportunities to use alternative energy within the district (e.g., the use of photovoltaics on the tank to generate enough electricity to supply controls and communications equipment).

14.2 Sources

In addition to upgrading individual facilities, the district looks at all its water sources as a portfolio. In general, the district wants to maximize use of surface water – because of three important factors: the quality of the water, the lower operational costs in treating and delivering water and the fact that it does not pull water from a declining aquifer.

Arapaho Well. The Arapaho Well is a critical resource and requires periodic maintenance. Approximately every seven years, the well should be inspected and any problems repaired. Potential decreases in aquifer levels also pose a long-risk to this well's availability. Current projects are:

- ***Rehabilitate Arapaho Well and Lower Pump.*** The Arapaho Well should be taken off-line, the current pump pulled out, the casing and bore hole inspected (and repaired if needed), additional casing added to the lower portion of the well (where there is currently no casing), and a new pump installed (with capability to pump water from a deeper level).

- ***Arapaho Wellhead Protection.*** The wellhead for the Arapaho Well is protected by stanchions. These have been previously hit by motor vehicles; while they are still functioning, they should be replaced. There should also be a determination made as to whether additional protective fencing may also be installed.

Dawson Well. The district is already being supplied by two other water sources, but may decide to bring this well online at some point in the future. This well is also impacted by decreases in aquifer levels.

- ***Equip Dawson Well.*** If a cost benefit analysis suggests that further investment in the source is warranted, then it may be worthwhile to outfit the Dawson well and build facilities to treat and deliver water.

Other Ground Water Sources. The Monument Creek alluvium may be a critical source of water to give the district triple redundancy in our water sources, i.e. surface water, ground water and alluvium augmentation (see the 2008 draft Water Supply Study for additional details). The cost/gallon may be better than the ground water costs but not as inexpensive as the surface costs. Technology is always improving in this area especially in the area of filtration. An augmentation plan that includes pulling water from the alluvium resources is usually only viable if water rights are severely constrained. This is not necessarily the case for FVAWD. We have adequate, and in some cases, plentiful water rights that have yet to be utilized. So, consideration of withdrawing alluvial water as another resource for the district can only be accomplished when it is proven to be less costly than other methods (e.g., new wells, refurbished existing wells, etc.) or resources that utilize idle non-tributary and not non-tributary rights. There is a potential project re the use of the alluvium:

- ***Monument Creek Alluvium.*** Evaluate developing alluvial wells. A thorough study needs to be undertaken to study EXACTLY where the aquifer is being screened for use in wells #2 and #4. Then, a determination needs to be made whether those are considered alluvial or not. If not, then can the wells be resealed below the alluvium in order to make them "alluvial?" If additional water sources are needed, development of the alluvial wells could be considered as an alternative to equipping the Dawson well.

Limbaugh Canyon Surface Water Intake. Of the two intakes, only the upper intake is being used and there are no current plans to redevelop the lower intake. The upper intake has the following proposed project:

- ***Redesign Limbaugh Canyon Intake***. Redevelop the surface water intake to increase reliability and flow, reduce maintenance requirements, and improve security. Rebuild the intake pond and secure the water intake around the screen. Reduce requirements to maintain the intake through the use of a design that promotes "self cleaning" and lower the bottom of intake to take advantage of subsurface stream flows. This could increase the year-round availability of surface water, reduce turbidity levels, reduce operational costs of annual clean-out of the intake, and make the intake less susceptible to vandalism. These improvements could also improve the operating efficiency of the STP. Some initial planning and analysis has been done for this project.

14.3 Treatment

Ground Water Treatment/Arapaho Treatment Plant. The Arapaho Treatment Plant has the capacity to process all the water that it can pump from the Arapaho Well (under its current water rights). This plant has performed well; however, the technology was state-of-the-art circa 1995 and remains an economical way of removing iron and manganese from drinking water. As technology changes, it may become worthwhile to evaluate technological advances. If the district decides to bring the Dawson well or alluvial water on-line, this reevaluation will become essential. While there is space inside the ATP to install additional treatment capacity, the Dawson and alluvial wells will have different treatment requirements. Upgrades should be evaluated for ROI and for ease of operations. Reevaluation of this plant will be a long-term effort. Currently, there are two proposed projects to upgrade the existing plant:

- ***ATP – Flow Pacing Chemicals.*** Currently, treatment chemicals are added to water based on timed increments. The efficiency of this process would be improved by changing this to flow-paced chemical injection so that the amount of chemicals added is aligned with the volume of water being treated.

- ***ATP – Filter Media Replacement.*** Every several years, the greensand media inside the filters needs replacement. When the filter media is spent (no longer capable of removing iron and manganese) the media will need to be replaced. The life span of the media is dependent on concentrations of contaminants, flow rates and adequate operation through backwash and regeneration. Because the filters are currently performing well, a date for the next scheduled replacement has not been established. A study can be performed to assess the degradation of the media thus far and to estimate a replacement date.

Surface Water Treatment Plant/Facilities. The Surface Water Treatment Plant has operational and reliability issues. It subject to pressure problems (both high pressure and spikes) and control malfunctions, and is labor-intensive to operate. There are three key projects will rectify most issues and, after they are implemented, smaller improvements can be identified. In the long-term, the entire plant may need reevaluation and upgrade. Currently identified projects in these areas are:

- ***STWP – Correct Pressure Variations.*** A PRV needs to be installed to reduce the pressure from intake water into the plant and pumps installed to pump treated water up to the tank. This will reduce the operating pressure to manufacturer recommended levels within the plant, but also increase electrical costs. This project has been designed and the district has approval to from CPDHE to complete the project in 2012.

- ***STWP – PLC and Additional Automation.*** Installation of a programmable logic controller (PLC) with additional automation of valves and other controls will allow the STP to run in a more automated mode with less operator intervention. This would replace outdated controls and allow the plant to backwash without an operator being present.

- ***STWP – Discharge Pond Compliance and Recycle Pump Rehabilitation.*** The discharge pond has severely degraded over the years and needs complete rehabilitation, including full clean-out of mud, debris and plant material; full inspection; and relining. This pond should be used for discharge of backwash waster from the STP and the pump that allows reuse of the backwash water needs to be rehabilitated so that the water recycling system can be brought back on line.

- ***SWTP – Membrane Filtration System.*** As a very long-term goal, the entire filtration system should be upgraded. At the time of this document, a membrane filtration system would be the best alternative in terms of efficiency and quality. Currently, this replacement would be very expensive (potentially as high as $1M), would probably need independent financing (i.e., a loan) and is beyond current budget considerations. However, technology continues to improve and costs are decreasing; this alternative may become viable in the future.

14.4 Delivery

Ground Water Delivery. With the 2010 transmission line replacement project, a significant portion of the transmission line work needed has been completed. There is only a single remaining project that deals with transmission above the booster station:

- ***Red Rock Reserve Transmission Line.*** The district has not yet scheduled bringing this facility online. Incorporation of this line into the system needs to be engineered, scheduled and planned as part of a major analysis and design effort for upgrades to the distribution system and upper transmission system. In addition, the footage of additional pipe to tie this in is a critical cost factor and needs to be estimated. Once completed, there would be transmission line continuously from ATP to the chlorine contact loop (by the SWTP) and to the tank. Tying in this section of transmission line to would allow the portion of the distribution system serving to be further isolated from the transmission line.

Booster Pump Station. The booster station is an essential component in delivering water from the Arapaho Well and Treatment Plant. There has been discussion of putting a small, intermediate storage tank in this facility to increase efficiency and reliability. This effort would also require additional piping and enlargement (or replacement) of the building. The booster station is particularly vulnerable to operational problems when there are pressure problems in the ATP; as the ATP maintains reliability, this upgrade becomes less critical.

- ***Booster Station Tank Upgrade.*** Install Inside the booster station, install a tank (estimated capacity would be 2,500 – 5,000 gallons) and add piping so that the tank provides a floating reserve. Build an additional foundation for the new tank. Expand the existing building or replace it with a new, larger pre-fabricated building. Add additional electrical and controls as needed.

Surface Water Delivery. There is a line from the Surface Treatment Plant that ties into a line that is also used to tie the tank into the distribution system. There has been discussion of moving the end of this line so that it feeds treated water directly into the tank. This option needs evaluation, and could result in more frequent turnover of water within the tank. It is possible that this alternative could be evaluated in conjunction with a master plan and evaluation of additional storage requirements. No project has been established for this.

Interconnects. Monument and Palmer Lake are water districts adjacent to FVAWD. Interconnecting with these adjacent water districts would allow for the districts to transfer and sell water to one another and to mutually support each other in case of major water outage, fire or other emergency. Interconnections between water districts are generally encouraged by state agencies, and partial grant funding may be available. Numerous issues need to be evaluated prior to implementation. These include requirements for Memoranda of Understanding (MOUs) with adjacent water districts, production and delivery expectations, metering, and assurances re the quality of water to be delivered. One important downside is that any district using another district's water is dependent on the other district's water quality and operational capabilities. Further evaluation is needed to determine potential locations of additional interconnects, whether they should be operated on a permanent or intermittent basis, and whether they should be treated as permanent installations or temporary facilities. A separate project for creating an interconnection to each adjacent jurisdiction should be considered:

- ***Palmer Lake Interconnect.*** Implement a permanent interconnection between Palmer Lake and FVAWD water systems that would replace current temporary connections. Preliminary discussions with Palmer Lake would need to include final agreement on interoperability and configuration.

- ***Monument Interconnect.*** Implement a permanent interconnection between Monument and FVAWD water systems. Initial discussion would be needed to determine if Monument has any interest.

14.5 Storage and Distribution

From an operational perspective, the district should maintain a 2X water usage overhead of its water assets at all times and water storage should not drop below a two-day usage average.

Tank. The tank will be tied into the future automation improvements at the STP that will automate STP start-up and shut-down. The tank needs periodic inspection and maintenance, both internally and externally. In 2010, the tank was relined in 2010 [warrantee work needed] and the exterior was panted. Internal inspection is typically done using divers going inside the tank, then inspecting, filming and evaluating the internal condition of the tank. This internal inspection should next be scheduled for 2016. A potential reline of the tank may be needed as early as 2030; however, any decision to reline the tank will be based on inspection results. The road to the tank needs to be maintained on an annual basis to clear overgrowth and rockslide, and to correct any erosion problems.

Distribution System. The district needs a multi-year plan for replacement of the majority of the distribution system; this planning could be tied into the master plan discussed earlier. The one section of the distribution system that does not need replacement is in the newly built Red Rock Reserve subdivision; this section is not expected to need replacement before 2057. The following discussion of subdivision-by-subdivision is based on the prioritization contained in the ASCG's 2006 capital improvement summary document. This represents a good starting point. However, prior to replacing major portions of the distribution system, additional work needs to be done. Rather than replacing the entire distribution system, the district's current approach is to establish a leak detection program and then locate and replace the areas within the district having the highest leak rates. In 2011, the district installed flow meters as the starting point of a leak detection program and to identify zones within the district that are may be more leak prone than others. An additional phasing option is to install major/trunk water mains as necessary within each subdivision and then follow by replacing smaller/branch water mains; this would establish allow major work to be done and allow smaller projects to be identified and completed as funding allowed. Furthermore, there are some internal discrepancies (e.g., linear feet needing replacement) within the ASCG report; this data needs validation prior sending out individual projects for bid. The ASCG report established priorities for replacement. Status of each subdivision is described as follows:

- ***The Villas Distribution System Replacement.*** The Villas has 17 lots, 2500 Lf of small diameter polyethylene, 3200 Lf of 2" PVC. The neighborhood is located at the bottom of the system; the small diameter poly lines prevent adequate fire flows. Back of lot easements are accessible, but the district's preference would be to relocate water mains in the street and in front of houses. Replacement of the current water line behind houses would require replacement of approximately 147' of main per house; this would be increased if water mains were moved to the street, but additional costs might be offset by eliminating the need to clear overgrown land. Moving lines to the street could also incur additional costs from required relocation of service lines. New 6" C900 creek crossing is the only pipe that would not be replaced and it serves as a good "backbone" to this area. This section is in degrading condition. Priority 1 subdivision.

- ***Cloven Hoof Distribution System Replacement.*** Cloven Hoof has 59 lots, 3500LF of 6" glued joint pipe; this is brittle and not a required pressure class. This subdivision averages 59' of water main per lot. This area has a history of leaks, but appears to have good feed off of Wells to tank lines. Long cul-de-sac dead ends should be replaced with loops to increase water quality and flow. This section is in degrading condition. Priority 2 and 3 subdivision.

- ***Red Rock Ranch Distribution System Replacement.*** Red Rock Ranch and Forest View Acres have approximately 160 lots, 25,000LF of miscellaneous pipe size and materials; this area is separated from the other neighborhoods by State Lands and a large drainage. Red Rock Ranch averages 156' of water main per lot. As the largest subdivision, it contains approximately 53% of all the water mains within the district. Several of the streets have 2-3 different size pipes and

materials; pipe is generally in decent shape with few leaks. Note: Stone View Road contains 800LF of 1" copper inside old 2" PVC, this serves 3 houses, constructed in this manner due to rock condition at about 3' depth. This would be an ideal area to loop the system and prevent long dead end lines. The distribution system in this subdivision is near the end of its expected life, and is suspected of having a large number of smaller leaks. This is a priority 3 subdivision.

- ***Shiloh Pines Distribution System Replacement.*** Shiloh Pines has 47 lots, 11,200 LF of 8" C900 PVC and 6" C900 PVC. Shiloh Pines averages 238' of line per lot. The neighborhood is in good condition with mainly 6" C900 PVC pipe. There is no loop, so 89 lots are fed with one 6" feed via 1 valve. Replacement of the neighborhood pipe is low priority; however, the looping is a higher priority. Old maps show a now abandoned 4" PVC line from the old Dawson Pump House (also known as Pump House 2 and now demolished) to Shiloh Pines; no other documentation has been found for this line. The Shiloh Pines system is currently believed to be adequate, but may have leaks and benefit from multiple feeds and some upsizing for fire flows. This is a priority 4 subdivision.

- ***Sundance Distribution System Replacement.*** Sundance has 42 lots, 8450 LF of 8" C900 PVC, 6" C900 PVC. The 6" feed to 42 lots onto Shiloh Pines should be looped to allow for better fire flows and water quality. The pipe is pressure water pipe and should last for at least 20 more years. Sundance averages 201' of water main per lot. Replacement priority of this neighborhood's pipe is low; and the system is currently believed to be adequate; however, the looping is a higher priority. The system may also benefit from upsizing for fire flows. This subdivision is a primarily a priority 5.

In addition to upgrades to the distribution system, upgrades to the water meters that measure usage at individual homes should be considered. Current district regulation requires that all new homes constructed in the district have water meters located roadside meter pits. However, this was not the case historically and the majority of homes within the district have meters located inside houses. This provides two sets of issues for the district. First, there is a strong possibility that a significant portion of the district's leaks are located in the service lines leading to individual homes. These service lines are owned by customers. Second, meters located within houses are more difficult to service. Operators are required to make appointments with residents, meters located inside houses may be more vulnerable to tampering, and in rare cases it may not be advisable to have district operators inside homes. Potential projects related to meters are:

- ***Move Meters to Street-side Meter Pits.*** New street side meter pits would be installed for homes that do not have them, meters would be placed inside the pits, with curb stops and backflow preventers replaced or installed where needed. Meters currently inside homes would either be abandoned or removed. This work could be done incrementally and in conjunction with replacement of distribution lines, or could be done on a district wide basis.

- ***Remote Meter Reading Capability.*** Currently, meters are read on a monthly basis by an operator driving to each meter in the district. This manual function could be replaced with an automated capability, with data collected that could be more directly loaded into the billing system. Wireless capabilities could also allow the ability to remotely check customer service lines for potential leaks. Furthermore, the meters currently used by the district are no longer being manufactured. When the manufacturer eventually sells its inventory, the district will need to change to a different meter. It may be advisable to a remote meter reading capability, either when changing the standard meters used or in conjunction with moving the meters to meter pits.

Regardless of any replacement decisions, the distribution system needs ongoing maintenance. This includes regular inspection and maintenance of hydrants, valves and flow meters. Meters for individual homes also need periodic replacement.

14.6 Controls

There are at least three levels in any automated control system. The lowest level is the device that is being controlled, like pumps, valves, etc. The next level is the controller or PLC that electrically controls those devices based on some kind of flow chart or decision scheme. The highest level is like the internet in that all of these PLCs get controlled as a whole via some master controller. SCADA (Supervisory Control and Data Acquisition) is a general term for a system that is used to monitor and control plant and facility operations. SCADA systems can be of varying complexity.

While some companies may refer to SCADA as a protocol, there are actually other competing protocols for control systems used in manufacturing, HVAC and other system processes. The equipment and protocols used by individual PLCs within each plant should be able to interoperate with a centralized SCADA system (should the district ever chose to implement one). Choices made for any protocol should be based on reliability, compatibility and cost. Once a control protocol is selected, it would be helpful to determine if "spooling up" into a control system would not only be wise, from an asset management perspective, but also from some of the intangible benefits that come with a slow ramp up of any major technology implementation. Therefore, a design that would permit a phasing of the system, i.e. Phase 1: All low level devices installed that can be controlled by any type of PLC, Phase 2: All PLCs installed on those devices that can utilize the chosen protocol and Phase 3: Full system control through chosen protocol like SCADA.

In 2010, the district's engineers developed a high-level schematic, identifying key elements of a district-wide, integrated control system. Figure 9 shows the most complete and integrated SCADA system that FVAWD could install in its current facilities. This schematic is the starting point for researching, developing and implementing an integrated control system. As the district continues to automate, the individual components implemented should compatible with this high-level specification.

.

Figure 9. SCADA Conceptual System Schematic

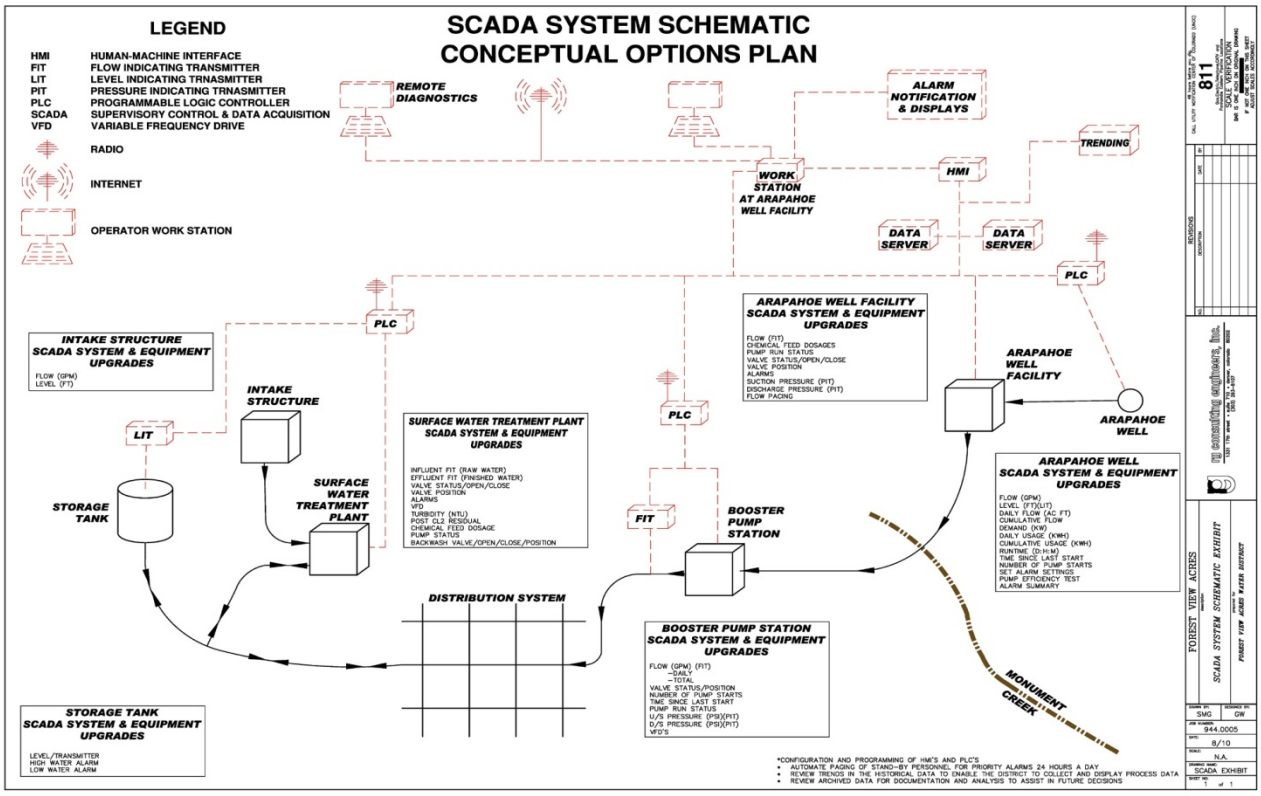

- ***System-wide SCADA*.** Develop and implement system-wide plan. Coordinate installation of new controls facilities with a system-wide scheme that will allow coordination between facilities. Draft Conceptual Plan to be developed and reviewed by summer 2012.

14.7 Land and Buildings

The district does not currently expect to acquire land or construct new buildings. Existing properties need periodic inspection and ongoing maintenance, including:

- Electrical inspections
- Foundation, roof, and structural inspections
- Road maintenance
- Landscape maintenance
- Painting.

14.8 Easements

The district needs to review its requirements for easements against its easement inventory and potential projects to identify that need to be obtained. For example, the development of alluvial wells or any reactivation of the line from transmission line to Shiloh Pines could need easements. Because a land swap is currently be considered for Limbaugh Canyon and the land on which our intakes are situated, the easements in this area are a critical priority.

- ***Define and Record Easements for Intakes*.** Initial easements for the Limbaugh Canyon intake were obtained from the Nevins in 2010. Additional easements need to be obtained from the U.S. Forest Service. Need to determine if the Nevins already have easements for the Forest Service land that can be transferred to the district.

- ***Easement Inventory, Definition, and Recording*.** The district needs to identify locations where water lines are in areas that do not have easements and review proposed projects to determine if they might generate new requirements for easements. This data would be compared against the districts existing inventory of easements (a record search might be needed) to determine what easements might be needed and/or if projects can be adjusted to avoid the need for an easement. Finally, legal paperwork would need to be developed and recorded.

14.9 Water Rights

The district owns more water rights than it needs to support its current customer base. The district does not have adequate facilities to process all the water it has right to. Discussions regarding the prudent and effective use of these assets have included ideas such as selling excess water rights in order to fund capital projects, selling excess processed water, and keeping water rights as insurance against potential rationing if aquifers continue to drop. In the past, the district has also been given the opportunity to buy more water rights. There needs to be a work session with identification of issues and action items to determine what action the district should take and what additional analysis or research needs to be done.

14.10 District Maps

District maps should be upgraded whenever district water lines and facilities are upgraded or replaced. These upgrades should be budgeted into other capital improvement projects, as appropriate. Annually, improvements and corrections to the maps should also be made to include field observations and corrections identified during normal district operations. At least one set of upgrades needs to be made to

ensure that all items that were reflected in the 1992 map set are also reflected in the current map set. The district may also have to decide if it wants to continue with the approach of having an aerial photograph as the foundational layer vs. aligning all the layers with survey data. The following projects would help provide a phased series of improvements to the maps:

- ***Implement a Regular Map Update Cycle.*** Errors and corrections are found in the normal course of using the districts maps. New construction (e.g., from the 2010 transmission line replacement project), some repairs and changes made to the system should also be reflected in the districts maps. This should initially be done no less than once a year, but could become less frequent as the number of required changes lessens.

- ***Map Update/Nomenclature.*** Add identifiers for hydrants, PRVs, etc. An asset nomenclature system has been requested by operators, would improve the utility of the maps and would eventually tie into an asset management system.

- ***Convert Existing Maps to GIS.*** GIS formatted maps would more accurately identify the locations of lines and facilities, make it easier to include new GIS location data into maps, and would align the current map set align with the boundary map. Conversion to GIS should include correcting pipe alignments to match those shown in the 1992 map set or better. Upon GIS conversion, the district should also ensure that it has a map management capability that will give operators the ability to make corrections to the maps (e.g., to add or update locations based on field observations) without needing to send the maps out to engineers or a mapping service.

- ***Map Update/Customer Service Lines.*** Add information re customer service line connections to district mains. Will increase map completeness, and help bring to level of 1992 maps. Information maintained by the operators will also be useful in adding service lines.

- ***Map Update/Lot Boundaries.*** Add map layer showing lot boundaries. Will increase map completeness, and help bring to level of 1992 maps. This data is available from the El Paso County Assessor's office and may be available in GIS format. Since one section of the district (Cloven Hoof) appears to have been built with the legal lot lines being different than where roads and house are built, a decision will have to be made as to whether this section of the district should be shown differently.

- ***Map Update/Contour Lines.*** Add map layer showing contour lines (elevation changes). Will increase map completeness, and is most useful on the master map sheet. This data may be available from the USGS and subdivision surveys.

- ***Easements.*** Add a map layer that shows all the easements owned by the district. This will help ensure that future work is done inside legal easements and will also help identify where easements are needed. This effort could also be one in two steps, with the first step being to include all known easements and the second step being add newly identified or acquired easements.

14.11 Administrative Systems

Upgrades to the existing systems environment should be examined and implemented overtime. Two key upgrades that have been identified are document management system and an asset management system; these two capabilities would help ensure that the district retains control over essential records. It may also be possible to provide operators with the ability to make minor corrections to automated maps and there may be opportunities to upgrade customer service (e.g., by allowing credit card transactions), but these areas have not yet been explored. Prior to selecting document and asset management systems, more detailed requirements need to be established and, ideally, tied into GIS map management capabilities. Implementation of automated systems also needs to include the effort needed to populate

these systems with useful data. Each system could be implemented as a separate project and is discussed below:

- **Document Management System.** Create a Document Management system, most likely a website that has public and private login to allow the public, board members and engineers to access information they need in one place. This will allow multiple individuals to collaborate on documents and provide a centralized repository of information accessible to the district, thus reducing research time and operating costs. Existing documentation will need to be indexed and migrated to a new site or archived. Information contained on this site may include maps, invoices, vendor contracts, engineering reports and monthly board meeting minutes as well as the current Emergency Response Plan. Implementing a document management system will also require that the district establish a document retention policy; some documents should be retained indefinitely while others can be retained for less time or should be destroyed.

- **Asset Management System.** Currently, district assets are tracked in paper record systems. Reasons for moving to an automated asset management system include improved maintenance scheduling; easier correction and update of records; ability to electronically dispatch maintenance; easier access to the data (including history) by multiple people; ability to track capital assets with service life; the ability to track costs and hours invested in a piece of equipment; and the potential to have remote backups. Consistent updates are essential to ensuring the value of this type of software. In general, asset management systems are relatively easy to by administer by a non-technical person and, if networked, can be administered by more than one person. Alternatives for implementation include a) the use of free asset management software (CUPS) provided by the EPA and b) using company-wide software supplied by Southwest Water. Implementation of this would require purchase of a PC (perhaps a laptop), load of baseline inventory data (e.g., the baseline developed by Dan), manual updates to the inventory to bring it to current standards. It may also require development of a standard notation scheme. Prior to going this direction, we would need to evaluate whether or not this approach would be beneficial to the operators or would cause more overhead (work). Implementation should be relatively low cost could provide benefits in managing maintenance schedules and for multi-year budget planning; however, any system chosen also needs to reflect operator needs and cannot be burdensome to use and maintain.

14.12 Operational Improvements

Improving the efficiency of internal operations can provide cost savings and can allow existing staff to spend a greater proportion of time on capital projects. Two projects are under discussion:

- ***Preventative Maintenance Program.*** Establishing a formal preventative maintenance program would make this more efficient and provide for continuity of service in new or temporary operators needing to run the district. An improved effective preventive maintenance program could also extend the life of equipment, more efficiently manage maintenance items that are only done once every several years, and improve the accuracy and stability of the maintenance budget.

- ***Operations Manual.*** The district has operations manuals for individual pieces of equipment, but there is no manual that addresses running the district as a whole or optimization within each treatment plant. In addition to providing for continuity of service, an operations manual would help provide a single place for identifying changes current operators have made to tune plant operations, would assist operators in troubleshooting, and would include details on items that occur infrequently.

Completion of these items would also be useful in board member education and in easing the ability for board members or other experts to look more closely at operations and identify potential improvements for discussion.

15. Project Evaluation

Rather than establishing a formal project evaluation model, the district's board has found that the most effective way to establish project priorities is to have a board-wide discussion that also includes the operators, and the management company. Discussion includes agreement on where the district should focus time and energy, as well as the issues associated with each project. This discussion should occur no less than once a year in conjunction with the budget cycle, and may occur more often. Experts and engineers may also be included.

The district's current project focus is three-fold:

- Give priority to making production-side facilities stable and robust
- Give early attention to items that may reduce operating costs or delay capital replacement costs
- Evaluate and replace portions of the distribution system having the highest leak rates or any other system with a risk of failure first.

Some issues that may be relevant in evaluating and implementing projects are included in Table 3.

Table 3. Project Evaluation Considerations

Urgency	Impact Summary	Special Circumstances	Planning Considerations
1) Failure or Imminent Failure (highest priority) 2) Situations causing degrading conditions (e.g., chemicals, building foundations, high pressures in pipes) 3) Items that help reduce operational costs or increase operational efficiencies 4) Functioning items near the end of their expected life (lowest priority)	Availability of alternatives (including emergency solutions) Number or percent of customers impacted Utility to operators Others?	Regulatory, Legal, Safety, Public health, Security, Environmental, Seasonality, Animal habitat, Others?	Major tasks and responsibilities Project-specific dependencies or predecessor activities (e.g., easements, water rights, construction standards) Coordination with other agencies Cross-project risk Funding availability Cost savings possible from timing or project sequencing Ability to manage multiple, simultaneous projects Vendor availability Others?

16. Capital Project List

Table 4 contains a list of capital projects proposed or being discussed. The inclusion of a project in this table does <u>not</u> represent a commitment to perform the project at some time in the future.

Table 4. Capital Project Summary

#	Project Title & Description	Estimated Cost	Rough Priority	Target Implementation	Planning Considerations & Notes
	ANALYSIS AND PLANNING				
1.	Master Plan – Distribution System & Water Storage		Immediate	2012	
2.	Water Supply Study Close-out		Whenever	TBD	Fund only by grant.
3.	Micro-Hydro	Unknown	Whenever	TBD	Other renewable alternatives?
	SOURCES				
4.	Rehabilitate Arapaho Well & Lower Pump	$50,000-70,000	Soon	2012/2013	Pricing needs verification.
5.	Arapaho Wellhead Protection		Immediate	2012	Gabby to get quote
6.	Equip Dawson Well	$250,000	Whenever	TBD	
7.	Monument Creek Alluvium	$100,000	Whenever	TBD	
8.	Redesign Limbaugh Canyon Intake	$100,000	Immediate	2012	
	TREATMENT				
9.	ATP – Flow Pacing Chemicals	$600-700	Immediate	2012	
10	ATP – Filter Media Replacement	$25-35K (?)	As needed	TBD	Gabby to get estimate.
11	SWTP – Correct Pressure Variations	$25-35K ? Check w/ RG for $$	Immediate	2012	Have CPDHE approval for one year.
12	SWTP – PLC & Additional Automation	$26-36K $$ need verification	Soon	2012	Less Costly to combine w/ PRV & booster pump installation (above)
13	SWTP – Discharge Pond Compliance & Recycle Pump Rehab	$11-26k $$ need verification	Immediate	2012/2013	Potential CPDHE issues.
14	SWTP – Membrane Filtration System		Long term	TBD	
	DELIVERY				
15	Red Rock Reserve Transmission Line	?	Soon	2012/2013	
16	Booster Station Tank Upgrade	$15-20K for tank & pipe	Soon	2012	Building cost separate
17	Palmer Lake Interconnect	Unknown	Whenever	TBD	Initial discussion
18	Monument Interconnect	Unknown	Whenever	TBD	Future Evaluation
	STORAGE & DISTRIBUTION				
19	The Villas Distribution System Replacement	$249,000	Soon	2013	

20	Cloven Hoof Distribution System Replacement	$250,000	Soon	2013	
21	Red Rock Ranch Distribution System Replacement	$1,020,000	Whenever	TBD	
22	Shiloh Pines Distribution System Replacement	$158,000	Whenever	TBD	
23	Sundance Distribution System Replacement	$209,000	Whenever	TBD	
24	Move Meters to Street-side Meter Pits		Whenever	Incremental	
25	Remote Meter Reading Capability	20-80K	Whenever	Pending funding	
	CONTROLS				
26	System-wide Controls/SCADA	$75,000	Whenever	TBD	After SWTP updates, decide if more automation is beneficial.
	EASEMENTS				
27	Define and Record Easements for intakes		Immediate	2012	
28	Easement Inventory, Definition, and Recording		Immediate	2012	
	DISTRICT MAPS				
29	Implement a Regular Map Update Cycle		Immediate	2012	
30	Map Update/Nomenclature	Unknown	Soon	2012	Currently underway
31	Convert Existing Maps to GIS	Unknown	Immediate	2012/2013	
32	Map Update/Customer Service Lines	Unknown	Soon	2012/2013	Redefine project this to be saddle & meter pit locations
33	Map Update/Lot Boundaries	Unknown	Soon	2012/2013	
34	Map Update/Contour Lines	Unknown	Soon	2012/2013	
35	Add Easements	Unknown	Soon	2012/2013	
	SYSTEMS				
36	Document Management System	Unknown	Immediate	2012	
37	Asset Management System	Unknown	Immediate	2012	
	OPERATIONAL IMPROVEMENTS				
38	Preventive Maintenance Program		Immediate	2012	Discussion needed
39	Operations Manual		Immediate	2012	

APPENDICES

A. Acronyms

ASCG
ATP = Arapaho Treatment Plant
CAD = Computer-Assisted Design
CDPHE = Colorado Department of Public Health and Environment
CI = Cast Iron
CRS = Colorado Revised Statutes
DOLA = Colorado Department of Local Affairs
FVAWD = Forest View Acres Water District
GPM = Gallons per Minute
HP or Hp = Horse Power
IGA = Intergovernmental Agreement
LF = Linear Feet
MOU = Memorandum of Understanding
PLC = Programmable Logic Controller
PRV = Pressure Reducing Valve
PSI = Pounds per Square Inch
PVC = Polyvinyl chloride
ROI = Return on Investment
SCADA = Supervisory Control and Data Acquisition
SWTP = Surface Water Treatment Plant
VFD = Variable Frequency Drive

B. References

Colorado Government

Colorado Department of Public Health and Environment, Water Quality Control Division, Source Water Assessment and Protection Program. *Source Water Assessment Report: Surface Water Sources and Ground Water Sources Under the Direct Influence of Surface Water – Forest View Acres WD, Public Water System ID: CO0121250, Monument, CO, El Paso County.* Denver: Colorado Department of Public Health and Environment. November 8, 2004. Print & PDF.

Colorado Department of Public Health and Environment, Water Quality Control Division, Source Water Assessment and Protection Program. *Source Water Assessment Report:* Ground Water Sources *– Forest View Acres WD, Public Water System ID: CO0121250, Monument, CO, El Paso County.* Denver: Colorado Department of Public Health and Environment. November 8, 2004. Print & PDF.

Santec. *Technical, Managerial & Financial (TMF) Capacity Assessment Report presented to the Forest View Acres Water District.* Denver: Colorado Department of Public Health and Environment. February 27-28, 2008. Print & PDF.

Sear-Brown. *Comprehensive Performance Evaluation (CPE) Report presented to the Forest View Acres Water District: Forest View Acres Water Treatment Plant*. Denver: Colorado Department of Public Health and Environment. January 10, 2002. Print & PDF.

Colorado Department of Natural Resources. *Ground Water Atlas of Colorado*, Special Publication 53. 2003.

District Maps

Forest View Acres Water District [District Maps]. Monument, CO: January, 1990 (p. 4) & August, 1992 (pp. 0-3 & 5-7). Print & PDF.

Forest View Acres Water District [District Maps]. Monument, CO: May, 1985. Print & PDF.

Nelson-Haley-Patterson & Quirk, Engineering Consultants. *Forest View Acres Water District: Division B Improvements* [District Maps]. Monument, CO: March, 1974. Print & PDF.

RG Consulting Engineers, Inc. *Forest View Acres Water District: Water Distribution System Maps* [District Maps]. Monument, CO: June, 2008. Print & CAD.

Engineering Reports

ASCG. *Facilities Assessment and CIP Report prepared for Forest View Acres Water District*. May 11, 2006. Print & PDF.

RG Consulting Engineers. *Forest View Acres Metropolitan District Water Supply Study Plan (Draft).*December 2008. Print & PDF.

Rothburg, Tamburini, Winsor, PE. *Design Memorandum, Water System Improvements for FVAWD*. January 1995. Print.

FVAWD Internal Documents

LaFontaine, Dan. *Facilities Inventory*. 2005. Spreadsheet.

Zillas, Paul J. *Letter to Dawn A. Shilling, CPA re Water Rights Owned by Forest View Acres Water District.* November 6, 2006. Print & PDF.

Websites

Colorado Department of Natural Resources, Colorado Geological Survey, Groundwater Atlas – http://geosurvey.state.co.us/water/groundwateratlas/Pages/GroundwaterAtlasofColorado.aspx

Colorado Division of Water Resources – http://water.state.co.us/

Colorado Division of Water Resources, Denver Basin Rules – http://water.state.co.us/DWRDocs/Rules/Pages/DenverBasinRules.aspx

El Paso County Assessor's Office – http://land.elpasoco.com/

El Paso County Clerk and Recorder – http://recordingsearch.car.elpasoco.com/rsui/opr/Search.aspx
State of Colorado Well Permit Search – http://www.dwr.state.co.us/WellViewWeb/default.aspx

C. History of Capital Improvements

This list of capital improvements has been manually compiled. It is based on the 2005 facilities inventory, with many of the improvements made added, and other information it has been identified. A goal should be to replace this manual list with a list generated from an asset management system; an automated list could include expected service life and depreciation and could be used to as part of the budget process and for preventive maintenance.

Table 5. Summary of Major Improvements and Capital Investment (History)

Date	Item Performed	Cost	Comments
	Arapaho Well		
1991	Arapaho Well Drilled	$443,363	This cost may include all drilling, outfitting and rehab work.
1995	Well Outfitted		
2005	Major Rehab, including pump replacement		
Fall 2010?			
	Dawson Well		
1973-2005			A previous "Dawson Well" was in production.
2005	Well drilled, casing and screen installed	$149,940	Well permits: 40123-F and 40213-F-R
Fall 2010	Well capped, old Dawson pump building demolished		Done in conjunction with Arapaho Transmission Line replacement
	Monument Creek (Limbaugh Canyon) Intake(s)		
?		$108,766	Intake and Pipe.
?			Lower Intake destroyed by flood.
2004	4" SS screen installed		
Summer 2010	Survey and easement work	$2,000	Includes surveyed locations of both upper and lower intakes, the line from the intake, easements and elevations.
	Ground Water Treatment Plant (Arapaho Treatment Plant)		
1995?	Plant initially built		
2000	Effluent side pressure relief valve – thorough cleaning		
2001	- Influent pressure gauge – replaced - DP pressure gauges X 2 – replaced		
2002	- Potassium permanganate pump – rebuilt pump side - Production meter – rebuilt & tested - Pump control valve – thorough cleaning		
2003	- Filter pressure reducing valve – thorough cleaning - Well side pressure relief valve – thorough cleaning		
2004	- Blow-off/waste meter installed - Backwash meter – rebuilt		

Date	Item Performed	Cost	Comments
	- Effluent pressure gauge – replaced - Effluent line pressure gauge – replaced		
2005	- Chlorine pump – rebuilt pump side - Chlorine tank – small bucket tank replaced - Tank level microwave receiver unit – replaced - Air compressor – rebuilt & repaired		
2007 or 2008	Backwash controller replaced		
2011	- VFD Replaced - Some automation added		
	Surface Water Treatment Plant (SWTP)		
?	Initially built	$930,000	
2000	Pressure reducing valve on backwash line replaced		
2001	- Backwash meter installed, tested - Pressure reducing valve for Cl2 analyzer installed - Effluent pressure gauge replaced		
2002	- Backwash pressure relief valve new - First stage filter #3 (steel) replaced - First stage backwash check valve installed - First stage backwash butterfly valve installed - Second stage backwash check valve installed - Second stage backwash butterfly valve installed - Production meter rebuilt, tested - Amperometric chlorine analyzer installed - Chlorine chart recorder installed (not being used??) - Influent pressure gauge replaced		
2003	- Chlorine tank new - First stage polymer pump tested, calibrated - Second stage polymer pump tested, calibrated - Polymer tank installed		
2004	Second stage NTU printer replaced		
2005	Chlorine pump – rebuilt pump side		
2010/2011	- Some automation added - Electrical Panel upgraded (new		

Date	Item Performed	Cost	Comments
	breaker box) - Some piping & fittings replaced		
	Transmission Line – ATP to Distribution System		
Fall 2010/ Jan 2011	New 4" Transmission line completed from the Arapahoe well to the Booster Station. New 4" line from BS to 4" CL distribution Line (DL) on Red Rocks Dr.		Estimated cost: $362,400
	Booster Pump Station		
	Initially built	$31,000	
1997	Recharge meter installed		
1999	Pressure relief valve (20hp pump) repaired		
2003	Air relief valve - torn down and reassembled		
2004	- Blowoff valve (ball type) - installed - Inline strainer installed - New impeller stacks (both pumps) - Replaced influent pressure gauge, pressure gauges for both pumps, effluent pressure gauge		
Fall 2010	- Re-plumbed pipes to provide bypass flows (recirculation), added control valves for future SCADA system. - Added plumbing to provide an emergency hookup into the Palmer Lake Water system.		
	Red Rock Reserve Transmission Line		
2007/2008	Built Transmission Line for Future Use	$51,610	This 6" PVC line was built in conjunction with the Red Rock Reserve inclusion and is located on Redstone Ridge Road.
	Interconnects – Palmer Lake		
2010?	Connection fittings installed at booster station	n/a	
2010	Temporary connection point to FVAWD transmission line removed	n/a	Done as part of transmission line replacement.
	Transmission Line – SWTP to Distribution System		
?	Initial installation		
2007/08?			Chlorine Contact line installed
	Distribution System		
As of 5/11/2006	Distribution system status is summarize in Table 1	As of 5/11/2006	See page 12
2008	PRV & Fire Hydrant Rehab and Maintenance	2008	Need to schedule recurring maintenance.
Fall 2011	Flow meter installation	Fall 2011	Flow meters installed in order to divide the district into "zones" and

Date	Item Performed	Cost	Comments
			detect high leak areas.
Fall 2011	New water main on Vista View Rd.	Fall 2011	A new water main was constructed on Vista View Rd as a result of a contractual agreement with the Nevins.
	Tank		
1975?	Tank installed		Expected service life = 50 years
1997	Tank cleaned and inspected		
Fall 2010/ Winter 2011	Tank refurbished internally Fall of 2010. This included rust removal and painting. Outside of the tank was also painted.		Interior failed and warrantee repairs are being scheduled for early 2012
	District Maps		
6/2008?	Baseline Electronic Map Set	?	The 1992 maps were redrawn in electronic format. These maps allow for regular correction and update. The initial set was built in layers w/ that include an aerial photograph, roads, and FVAWD water lines and facilities. Selected elements of the 1992 maps are yet to be incorporated into the new map set.
1/2010	District Boundary Map	$2,400	For 2010, DOLA's electronic submission requirements become more rigorous. Additional work was required to develop these maps. While 2008 map set had been created to assist in the operations and management of the district, the boundary maps were required to be based on legal description.